REVISIONS				
ZONE	REV	DESCRIPTION	Date	APPROVED

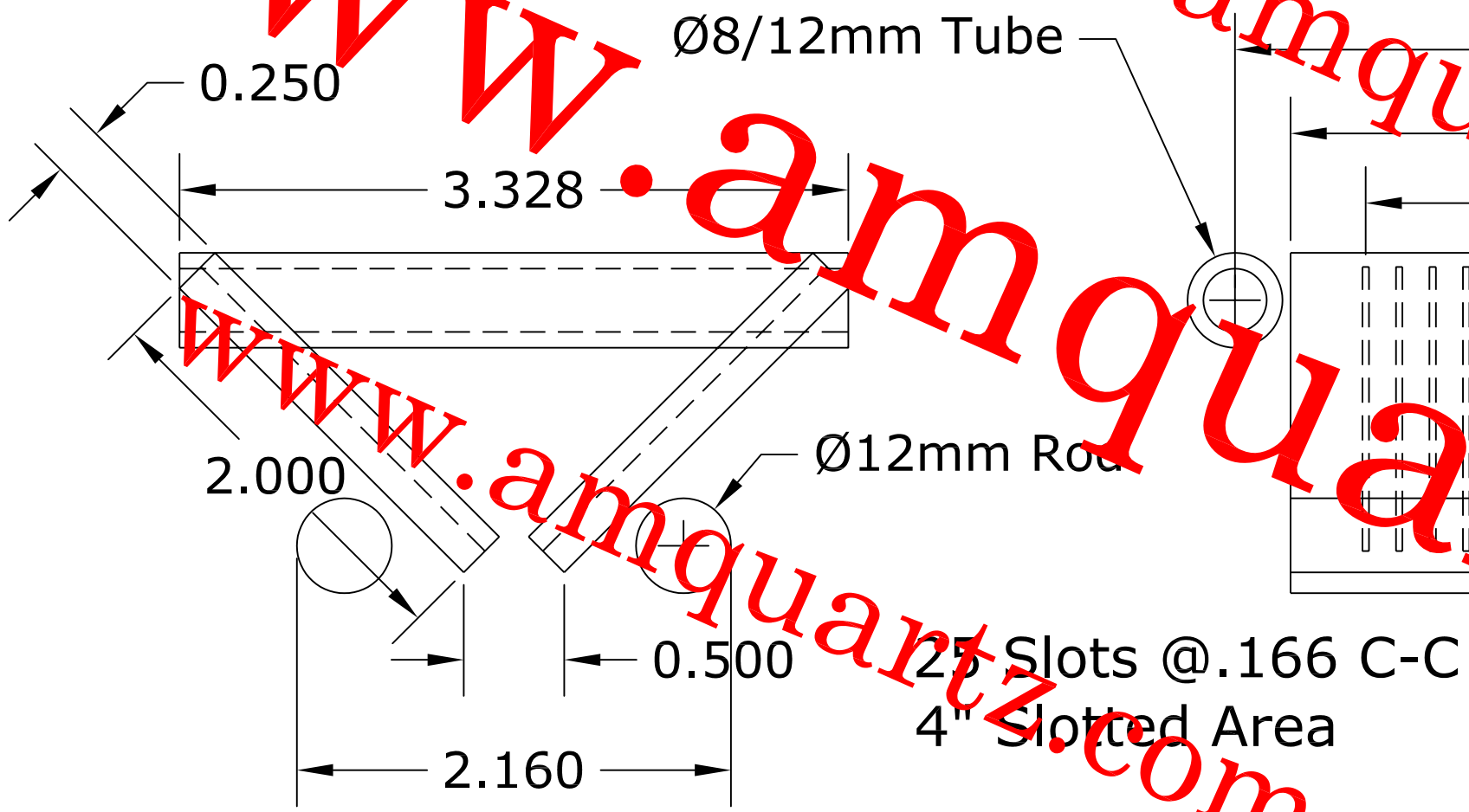

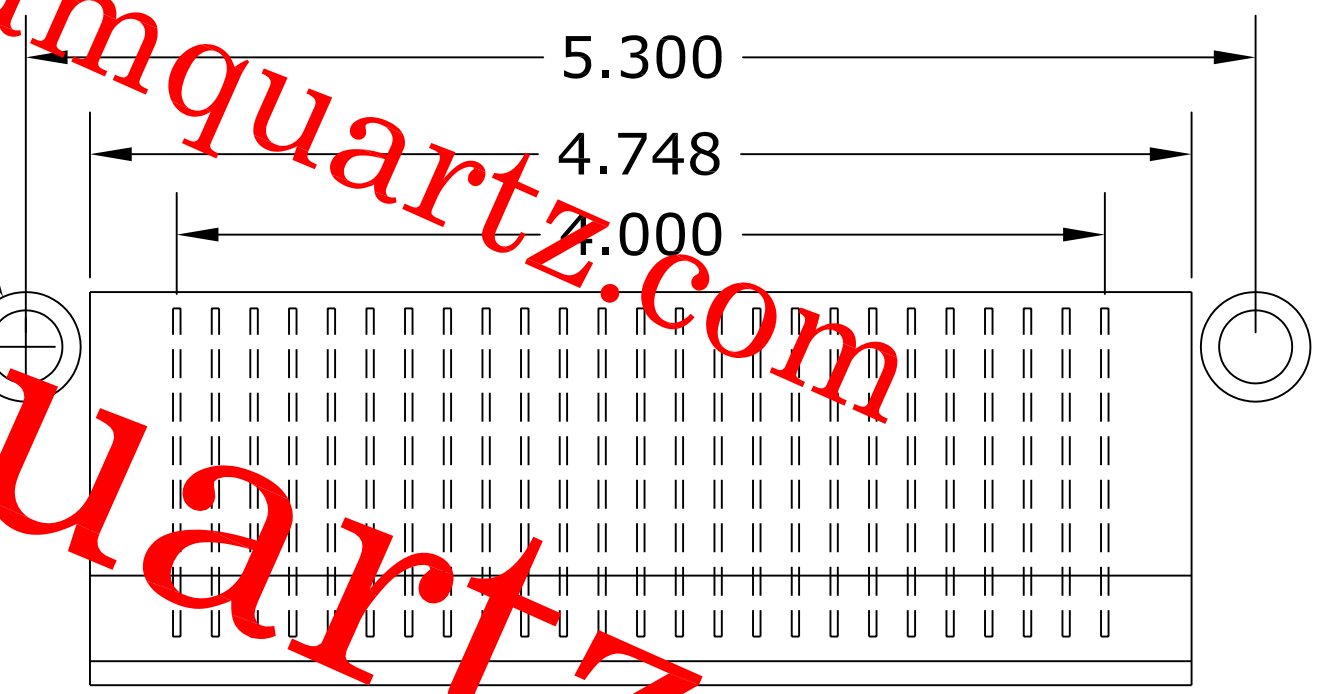

All dimensions in inches unless otherwise noted.

A.M. Quartz Corporation
2400 Alabama D[illegible] Gainesvi[illegible] TX 76[illegible]0
Tel:(940)612-1011 [illegible]ax:(9[illegible] 612-1[illegible]4

Square Boat

Drawn By	SIZE	DWG NO.	REV
Material Semiconductor Grade Quartz	Scale	Date	Sheet

www.amquartz.com